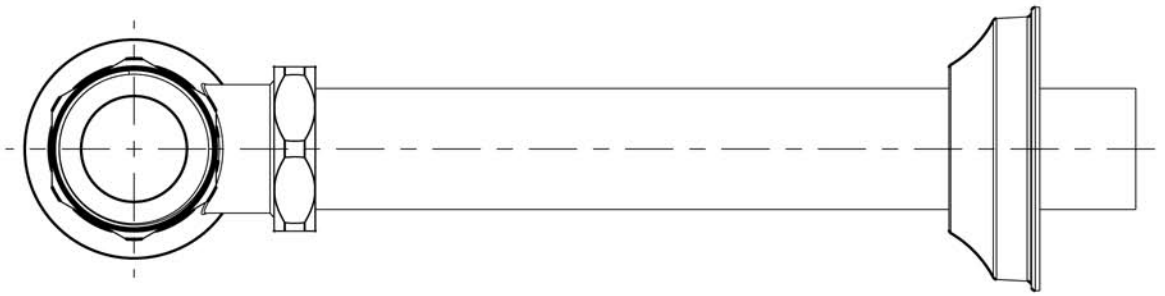

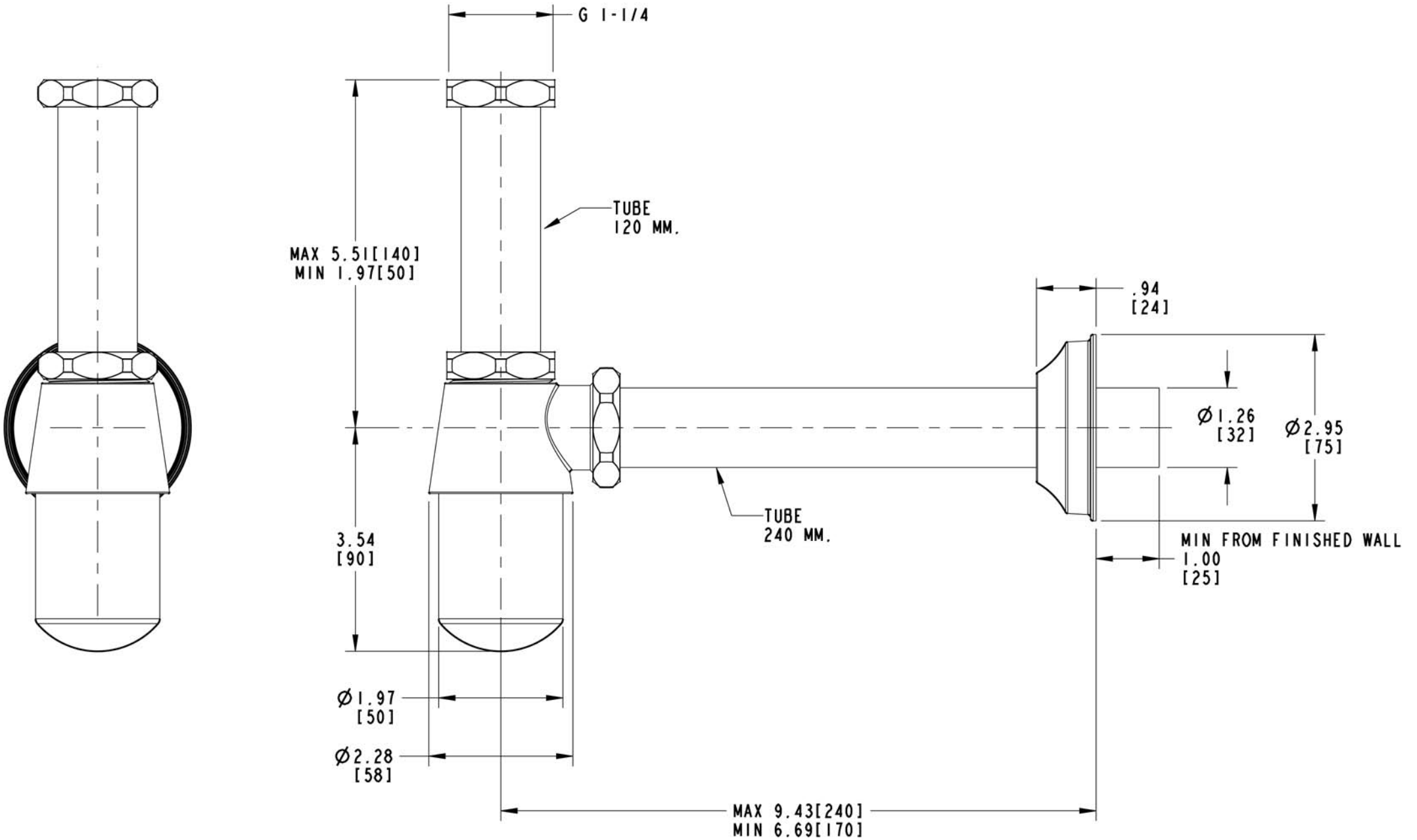
G 1-1/4
TUBE
120 MM.
MAX 5.51[140]
MIN 1.97[50]
.94
[24]
Ø1.26
[32]
Ø2.95
[75]
TUBE
240 MM.
3.54
[90]
MIN FROM FINISHED WALL
1.00
[25]
Ø1.97
[50]
Ø2.28
[58]
MAX 9.43[240]
MIN 6.69[170]