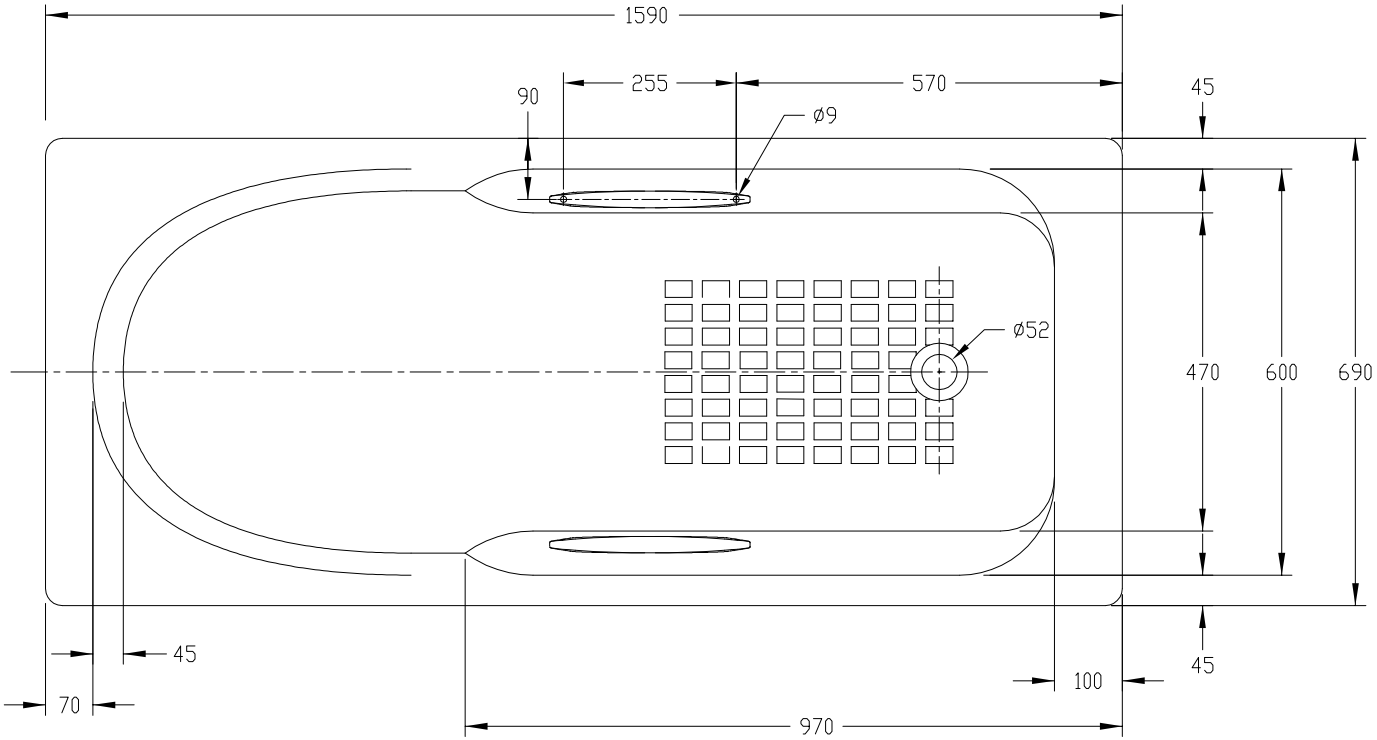
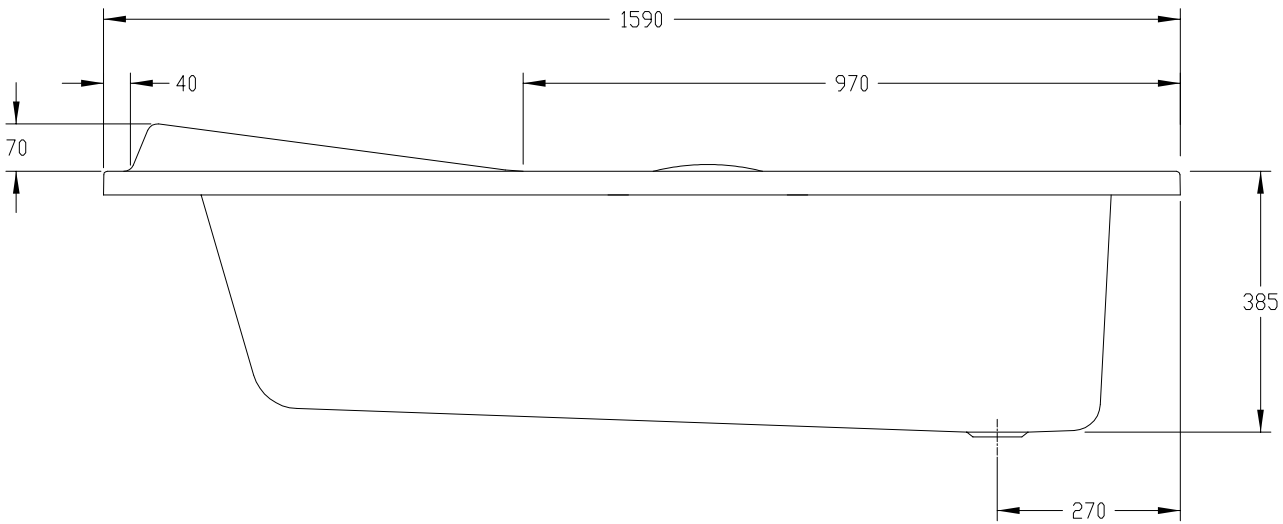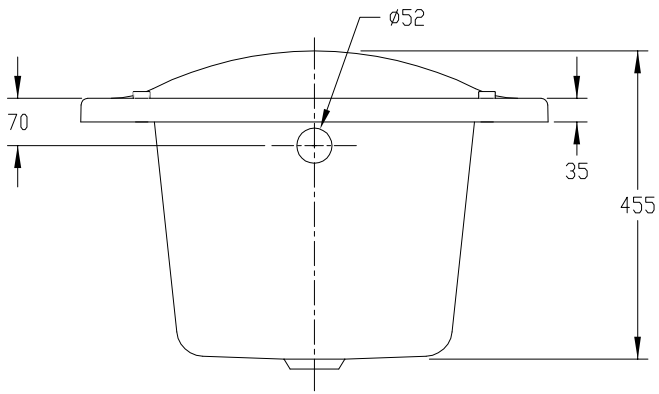
UNIT: MILLIMETER [MM]